Roger Access Control System

OSR80M-BLE Reader

Installation Manual

Hardware version: v1.0
Firmware version: v1.0.8.205 and newer
Document version: Rev. F

This document contains minimum information that is necessary for initial setup and installation of the device. The detailed description of configuration parameters and functionalities is specified in respective Operating Manual available at www.roger.pl. This document is subject to the Terms of Use in the current version published on the website www.roger.pl. The manufacturer reserves the right to make changes to the product without prior notice. *© ROGER sp. z o. o. sp.k. All rights reserved.*

Introduction

The terminal is designed for operation with controller which is equipped with OSDP interface. Therefore, the terminal can be applied in third party systems. In case of RACS 5 system the terminal can be connected to MC16 access controller via MCI-3 interface. Factory new terminal is configured with default settings including OSDP ID=0 address.

Configuration with RogerVDM Program

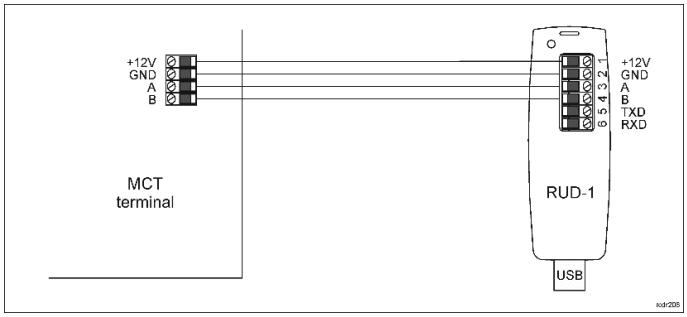

Fig. 1 Connection of OSR terminal to RUD-1 interface

Programming procedure:

1. Connect the device to RUD-1 interface (fig. 1) and connect the RUD-1 to computer's USB port.
2. Remove jumper from MEM contacts (fig. 2) if it is placed there.
3. Restart the device (switch power supply off and on) and orange LED SYSTEM will pulsate. Then within 5 seconds place jumper on MEM contacts.
4. Start RogerVDM program, select *OSR* device, *v1.0* firmware version, *RS485* communication channel and serial port with RUD-1 interface.
5. Click *Connect,* the program will establish connection and will automatically display *Configuration* tab.
6. Specify unoccupied OSDP address in range of 0-126 and other settings according to requirements of specific installation.
7. Click *Send to Device* to update the configuration of device.
8. Optionally make a backup by clicking *Send to File…* and saving settings to file on disk.
9. Disconnect from RUD-1 interface and leave jumper on MEM contacts.

Note: Do not read any cards when reader is configured with RogerVDM.

Manual addressing

Manual addressing procedure enables configuration of new OSDP address with all other settings unchanged.

Manual addressing procedure:

1. Remove all connections from A and B lines.
2. Remove jumper from MEM contacts (fig. 2) if it is placed there.
3. Restart the device (switch power supply off and on) and orange LED SYSTEM will pulsate. Then within 5 seconds place jumper on MEM contacts.
4. Enter 3 digits of OSDP address in range of 0-126 with any MIFARE card.
5. Leave jumper on MEM contacts.
6. Restart the device.

Terminals without keypad can be addressed with multiple card readings where the N number of readings emulates digit of the address. Three series of readings with any MIFARE proximity card are necessary to set the address. After each series wait for two beeps and proceed with the next digit. Zero digit is emulated with 10 readings.

Example:
Programming of ID=001 address with card readings:

1. Read card 10 time and wait for two beeps.
2. Read card 10 times and wait for two beeps.
3. Read card 1 time and wait for two beeps.
4. Wait till reader is restarted with the new address.

Memory Reset

Memory reset procedure resets all settings to factory default ones including ID=0 address.

Memory reset procedure:

1. Remove all connections from A and B lines.
2. Remove jumper from MEM contacts (fig. 2) if it is placed there.
3. Restart the device (switch power supply off and on) and orange LED SYSTEM will pulsate. Then within 5 seconds place jumper on MEM contacts.
4. Read any MIFARE card 11 times.
5. Wait till device confirms reset with long acoustic signal.
6. Leave jumper on MEM contacts.
7. Restart the device.

Firmware Update

The firmware of device can be changed to newer or older version. The update requires connection to computer with RUD-1 interface (fig. 1) and starting RogerVDM software. The latest firmware file is available at www.roger.pl.

Note: Backup configuration with RogerVDM software before firmware update because the update will restore factory default settings.

Note: If MCI-3 type interface is connected to the terminal then it must be disconnected during firmware update.

Firmware update procedure:

1. Connect the device to RUD-1 interface (fig. 1) and connect the RUD-1 to computer's USB port.
1. Place jumper on MEM contacts (fig. 2).
2. Restart the device (switch power supply off and on).
3. Start RogerVDM program and in the top menu select *Tools* and then *Update firmware*.
4. In the opened window select device type, serial port with RUD-1 interface and path to firmware file (*.frg).
5. Click *Update* to start firmware upload with progress bar in the bottom.
6. When the update is finished, disconnect from RUD-1 interface. Additionally, it is recommended to start memory reset procedure.

INSTALLATION

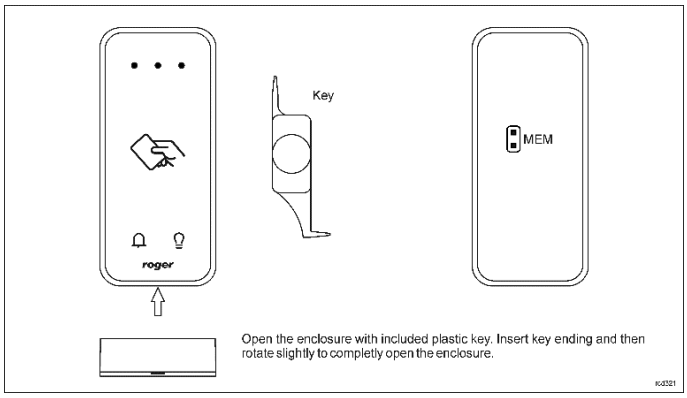

Fig. 2 Enclosure opening and location of service contact.

Table 1. Wires		
Name	Wire color	Description
12V	Red	Supply plus
GND	Black	Ground
A	Yellow	OSDP bus, line A
B	Green	OSDP bus, line B

Note: OSR80M-BLE enclosure consists of front panel and back panel. New device is assembled with a standard back panel, but additional free of charge, extended back panel is included. This panel can be used when connection cable has to be hidden and no flush mounting box is available.

Installation guidelines

- The terminal should be mounted on a vertical structure (wall) away from sources of heat and moisture.
- Front panel should be attached in such way as the tamper detector would firmly press the back panel.
- All electrical connections should be done with disconnected power supply.
- If the device is installed in a place exposed to conductive dust (e.g. metal dust), protect the MEM/RST/FDM pins with insulating mass, e.g. silicone, after installation.
- If the terminal and controller are not supplied from the same PSU then GND terminals of both devices must be connected with any wire.
- Device can be cleaned by means of wet cloth and mild detergent without abrasive components. In particular do not clean with alcohols, solvents, petrol, disinfectants, acids, rust removers, etc. Damages resulting from improper maintenance and usage are not covered by manufacturer warranty.

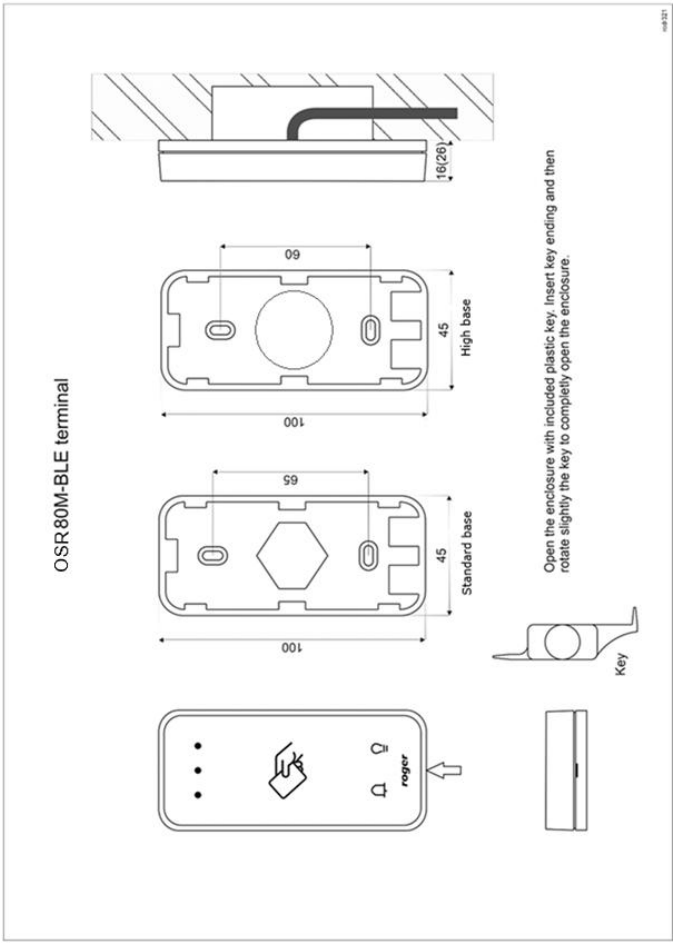

Fig. 3 OSR80M-BLE installation.

APPENDIX

Table 2. Specification	
Nominal supply voltage	12VDC
Nominal supply current	~70 mA
Tamper protection	Enclosure opening reported to access controller
Identification methods	13.56MHz Mifare® Ultralight, Classic, Plus and Desfire (EV1, EV2, EV3) proximity cards Mobile devices (Android) with NFC Mobile devices (Android, iOS) with BLE (Bluetooth Low Energy) v4.1
Reading range	Up to 7 cm for MIFARE cards and NFC Up to 10 m for BLE – depends on ambient conditions and particular mobile device. Terminal's radio power can be increased within low level configuration. Note: In the presence of electrical interference, the reading range of proximity cards and the operating range of BLE may be significantly reduced and, in extreme cases, the operation of these functions may even be blocked.
Distance	1200 m maximal cable length for RS485 bus between controller and terminal
IP	IP65
IK	IK06
Environment	Outdoor general conditions, temperature: -25°C to +60°C, relative humidity: 10 to 75% (no condensation)
Dimensions HWD	100x45x16(26) mm
Weight	~100g
Compliance	CE, RoHS
Manufacturer's warranty	36 months

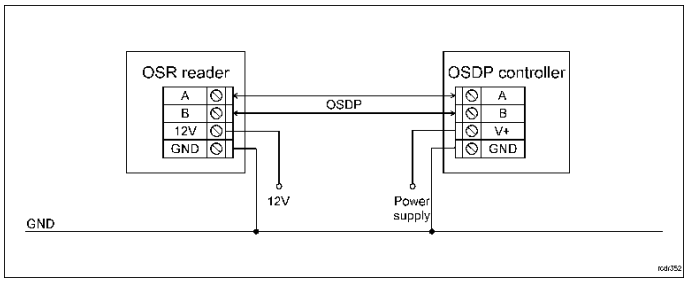

Fig. 4 Connection of terminals and expanders to MC16 access controller

Table 3. Ordering information	
OSR80M-BLE	Access terminal; 13.56 MHz MIFARE Ultralight/Classic/DESFire (EV1, EV2, EV3)/Plus/NFC/BLE; OSDP v2.2; supply 12 V; QUADRUS series design
MCI-3	The interface enables the connection of the readers that use OSDP protocol to MC16 series controllers (RACS 5 system); 12 VDC power supply
RUD-1	Portable USB-RS485 communication interface dedicated to ROGER access control devices

Table 4. Product history		
Version	Date	Description
OSR80M-BLE v1.0	02/2022	The first commercial version of product

This symbol placed on a product or packaging indicates that the product should not be disposed of with other wastes as this may have a negative impact on the environment and health. The user is obliged to deliver equipment to the designated collection points of electric and electronic waste. For detailed information on recycling, contact your local authorities, waste disposal company or point of purchase. Separate collection and recycling of this type of waste contributes to the protection of the natural resources and is safe to health and the environment. Weight of the equipment is specified in the document.

Contact:
Roger Sp. z o. o. sp. k.
82-400 Sztum
Gościszewo 59
Tel.: +48 55 272 0132
Fax: +48 55 272 0133
Tech. support: +48 55 267 0126
E-mail: support@roger.pl
Web: www.roger.pl